Reg. No. | 9 | 5 | 1 | 7 | | | | | | | | | |

Question Paper Code: 20622

B.E. / B.TECH. DEGREE EXAMINATIONS, NOVEMBER / DECEMBER 2023

Third Semester

Common to Computer Science and Engineering & Information Technology

19CS302 – DIGITAL PRINCIPLES AND SYSTEM DESIGN

(Regulations: Mepco – R2019)

Duration: 3 Hours Max. : 100 Marks

Answer ALL Questions

BTL, CO

PART A – (10 × 2 = 20 Marks)

A, CO1 1. The representation of $(35)_{10}$ in 8, 4, -2, -1 binary code is _____. Justify your answer.

A) 0011 0101 B) 0101 1011 C) 100011 D) 0110 1000

A, CO1 2. Which of the following input condition(s) result(s) in logic 1 for the X-NOR gate? Justify your answer.

A) 1111 B) 0111 C) 0101 D)1101

A, CO2 3. For doing 10-bit by 9-bit multiplication, _____ number of _____ bit binary adders are needed. Justify your answer.

U, CO2 4. Compare encoder and decoder.

A, CO3 5. Memory with 16K words require _____ number of address lines. Justify your answer.

A) 11 B) 12 C) 13 D) 14

U, CO3 6. Compare PROM and EPROM.

U, CO4 7. Compare flip-flop and latch.

A, CO4 8. Suppose the current state of the JK flip-flop is 1 and J & K inputs are 1 & 1 respectively. Then the next state is _____. Justify your answer

U, CO5 9. What do you know about asynchronous sequential circuits?

U, CO5 10. Differentiate critical and non-critical races.

PART B – (5 × 16 = 80 Marks)

A, CO1 11. a) i. Simplify the Boolean function

F(A, B, C, D) = Σ(0, 2, 3, 5, 7, 8, 10, 11, 14, 15) using Tabulation method. (10 Marks)

A, CO1 11. a) ii. Implement the following Boolean expression with exclusive-OR and AND gates after simplification.

F = AB'CD'+ A' BC D' + AB' C' D + A' BC' D (6 Marks)

OR

A, CO1 11. b) i. Implement the following Boolean function F, together with the don't-care conditions d, using no more than two NOR gates:

F(A, B, C, D) = Σ(2, 4, 10, 12, 14)

d(A, B, C, D) = Σ(0, 1, 5, 8)

Assume that both the normal and complement inputs are available. (10 Marks)

A, CO1 11. b) ii. Show that the dual of the exclusive-OR is also, its complement. (6 Marks)

A, CO2 12. a) i. Design a code converter that converts a decimal digit from 8, 4, –2, –1 code to Gray code. (8 Marks)

A, CO2 12. a) ii. Write a HDL program to implement the Boolean function Y = Σ(0, 3, 6, 7) using decoder. (8 Marks)

OR

A, CO2 12. b) i. Analyze the below combinational circuit:

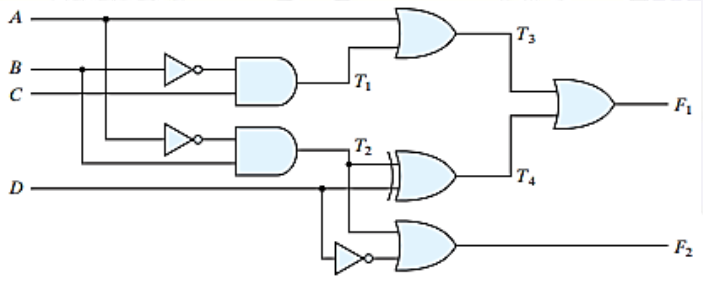

(8 Marks)

A, CO2 12. b) ii. Implement the following Boolean function with a 4 x 1 multiplexer and external gates:

F(A, B, C, D) = Σ(1, 2, 5, 7, 8, 10, 11, 13, 15) (8 Marks)

A, CO3 13. a) i. Tabulate the truth table for an 8 x 4 ROM that implements the Boolean functions

A(x, y, z) = Σ (0, 3, 4, 6)

B(x, y, z) = Σ (0, 1, 4, 7)

C(x, y, z) = Σ(1, 5)

D(x, y, z) = Σ(0, 1, 3, 5, 7)

Considering now the ROM as a memory, specify the memory contents at addresses 1 and 4. (8 Marks)

U, CO3 13. a) ii. Give brief account and classification of memory and memory decoding. (8 Marks)

OR

A, CO3 13. b) i. The following is a truth table of a three-input, four-output combinational circuit:

Inputs			Outputs			
x	y	z	A	B	C	D
0	0	0	0	1	0	0
0	0	1	1	1	1	1
0	1	0	1	0	1	1
0	1	1	0	1	0	1
1	0	0	1	1	1	0
1	0	1	0	0	0	1
1	1	0	1	0	1	0
1	1	1	0	1	1	1

Tabulate the PAL programming table for the circuit and mark the fuse map in a PAL diagram. (8 Marks)

U, CO3 13. b) ii. Explain the concept of memory expansion by considering an appropriate example. (8 Marks)

A, CO4 14. a) i. Design a counter with the following repeated binary sequence: 0, 1, 2, 3, 4, 5, 6 using JK flip-flop. (8 Marks)

U, CO4 14. a) ii. How can you implement 4-bit binary ripple counter? Explain with a neat diagram. (8 Marks)

OR

A, CO4 14. b) i. Design a sequential circuit with two D flip-flops A and B and one input x_in. When x_in = 0, the state of the circuit remains the same. When x_in = 1, the circuit goes through the state transitions from 00 to 11, to 01, to 10, back to 00 and repeats. (8 Marks)

U, CO4 14. b) ii. Elaborate on state reduction and assignment in a sequential circuit with an example. (8 Marks)

A, CO5 15. a) i. An asynchronous sequential circuit has two internal states and one output. The two excitation functions and one output function describing the circuit are, respectively,

$Y_1 = x_1x_2 + x_1y_2' + x_2'y_1$

$Y_2 = x_2 + x_1y_1'y_2 + x_1'y_1$

$z = x_2 + y_1$

A) Draw the logic diagram of the circuit

B) Derive the transition table and output map

C) Obtain a flow table for the circuit. (8 Marks)

U, CO5 15. a) ii. Explain in detail about any two methods of race-free state assignment with suitable examples. (8 Marks)

OR

A, CO5 15. b) i. For the asynchronous sequential circuit shown below:

A) Derive the Boolean functions for the outputs of the two SR latches Y_1 and Y_2. Note that the S input of the second latch is x_1', y_1'

B) Derive the transition table and output map of the circuit.

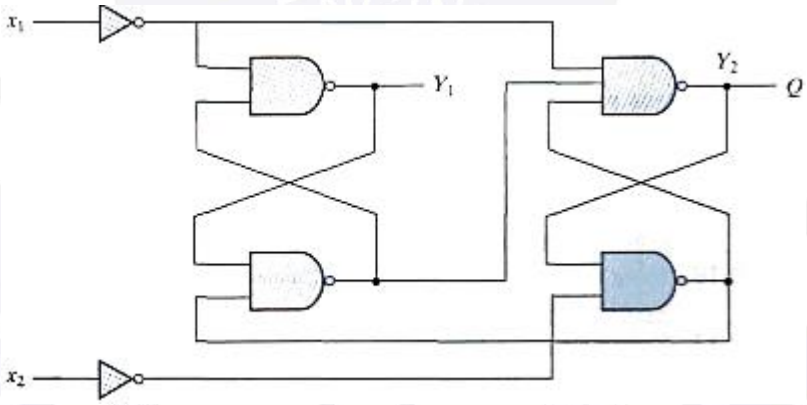

(8 Marks)

U, CO5 15. b) ii. Discuss about different types hazards and their removal in both combinational and sequential circuit. (8 Marks)